USE TO NAVIGATE THIS DIGITAL BROCHURE...

eartheco®

The natural selection

pool pumps product catalogue

COMPANY

CONTACTS

eartheco – our company

PROVIDING EXCEPTIONAL EQUIPMENT TO THE SWIMMING POOL TRADE SINCE 2002.

eartheco is a wholly South African company, 100% owned & staffed by South Africans.

Our company philosophy focuses on four key areas:

1. designing and producing **exceptional products**,
2. doing business in a way which **gives back to the natural environment**,
3. providing a **secure, meaningful and pleasant working environment** for our staff,
4. interacting with suppliers and customers in a **respectful and mutually beneficial way**.

eartheco was always structured to enable employees to contribute to the protection of the environment – we actively work with the **Wilderness Leadership School**, the **Pilanesberg Wildlife Trust** and the **North West Parks Board** to birth opportunities for environmental consciousness and to provide protection for endangered species, particularly the Rhino populations in the Pilanesberg.

In supporting our company and its products you are also assisting in this activity.
Thank you!

NAVIGATING THIS **DIGITAL BROCHURE**

Using your cursor/mouse move to your desired page.

TAB **LINKS:**

(indicated by your cursor changing when over a link) takes you to the labelled option & the icons, bottom right, take you to:

- HOME PAGE
- PRODUCT LIST
- CONTACT INFO

eartheco®
The natural selection

eartheco Pumps & MOTOR COMPLETE



eartheco **E-Que** Pump



eartheco **RD** Pump

eartheco®
The natural selection

E-Que Pump & MOTOR COMPLETE

0.60kW **K71** | 0.75kW **K71** | 0.75kW **K80** | 1.10kW **K80**

General

1) **Self Priming, Centrifugal Type Pumps** with closed vane impellers.

- 0.60kW **K71**
- 0.75kW **K71**
- 0.75kW **K80**
- 1.10kW **K80**

- Fitted with leaf trap strainers, mechanical shaft seals and squirrel cage induction motors with heavy duty ball bearings.

The pump type and serial number are on a nameplate attached to the motor shroud, and the motor data is in a nameplate attached to the side of the motor.

Always quote pump type, serial number and motor make in any correspondence or when ordering spares.



GENERAL **INFO**
DETAILED **INFO**
EXPLODED VIEW
CROSS **SECTION**
PUMP CURVES
DIMENSIONS
ALL **PUMPS**

eartheco® *The natural selection*

Detailed Information



Installation, Operating, Maintenance Instructions & Warranty

2) Installation

A good installation of your pool pump will result in many years of trouble free operation. **Careful attention must be paid to the following:**

2.1 Piping

The suction and discharge pipes must not be smaller in diameter than the pump connection i.e. Suction pipe diameter(0) 50mm, discharge pipe diameter(0) 50mm minimum. On 1.1 kW & 1.5kW a suction pipe of 63mm should be used. Suitable unions should be placed in the lines adjacent to the pump connections in case the pump body has to be removed, where pump unions do not already perform this function. Do not support the pipework on the pump or vice versa. Make sure all pipe connections are completely water/air tight by using a suitable pipe jointing compound. Keep suction pipe as short as possible and only use pipes that are sufficiently rated to work at a minimum of 4 bar pressure. The suction line should enter the pump straight and horizontally for a length of at least 4 x the diameter of the pipe.

2.2 Pump Positioning

(Important for motor cooling)

We recommend that the pump be positioned at a level of no more than ± 300mm above your pool water level. Again we stress the fact to keep the suction line as short as possible. A minimum clearance of 150mm must be allowed behind the motor fan cowling to the nearest obstruction to ensure proper ventilation and easy access for servicing. The pump house/box must also have provision for adequate drainage facilities.

2.3 Ventilation

As the electric motor is fan cooled, sufficient ventilation must be allowed at all times during operation. Failure to do this will cause overheating resulting in premature bearing failure and/or motor burnout. If your pump house/box does not have ventilation holes the lid or door should be left open during operation of the pump.

GENERAL INFO
DETAILED INFO
EXPLODED VIEW
CROSS SECTION
PUMP CURVES
DIMENSIONS
ALL PUMPS

ecogene

eartheco recommends the use of **eco**gene **pool care products.**

Detailed Information



Installation, Operating, Maintenance Instructions & Warranty

2.4 Drainage

Flooding of the electric motor is the most common cause of motor failure. It is essential that adequate drainage be provided in the pump house/box. If the motor fails as a result of flooding then there is no warranty whatsoever irrespective of how the water penetrated the motor. The pump must be protected from rain and flooding.

2.5 Electric Connections

These must be carried out by suitably qualified people only. Do not change the motor position as it is provided with a drain hole at the bottom to drain off any water which may leak past the mechanical shaft seal. A cable gland must be fitted to the terminal box. 3 phase pumps must be installed with an appropriately rated overload protection device. **NOTE**: The length of cable supplied with the pump is for testing only and should be replaced with suitably rated cable. Minimum specification 60245IEC66 (HO7RN-F).

2.6 Rotation

Before checking the rotation, drain the pump leaf trap of water. The correct rotation is clockwise when viewed from the motor end. Pumps with 220 volt single phase motors are wired at our factory for the correct rotation. 3 phase pumps require the rotation to be checked before operating to prevent a damaged impeller.

3) Commissioning

A) Remove the clear leaf trap lid and fill the pump with water at the leaf trap until it flows out of the suction pipe connection. The thumb screw that holds down the leaf trap lid must only be hand tightened. Do not use a spanner, pliers or pipe wrench. **B)** switch on the pump and allow to run. The pump will take a short while to prime fully and then deliver full quantity. The pump must run smoothly and quietly. The pump should need no further priming by hand. On 380 volt motors check the rotation corresponds with the arrow on the fan cowl.

[continues onto next page]

GENERAL INFO
DETAILED INFO
EXPLODED VIEW
CROSS SECTION
PUMP CURVES
DIMENSIONS
ALL PUMPS

ecogene

eartheco recommends the use of **eco**gene **pool care products.**

Detailed Information



Installation, Operating, Maintenance Instructions & Warranty

C) Diatomaceous earth(D.E.) filters should now be charged by pouring the D.E. into the weir of the swimming pool. **D)** Sand filters must be filled with water, then charged with sand directly into the filter and not through the pump or the weir. **E)** The motor temp. under normal conditions will rise to approximately 40°C above the ambient temp.

4) Hints for Good Running

A) Clean the leaf trap in the pump and pool weir regularly. **B)** Do not allow dust to accumulate on the motor as this affects the cooling process. **C)** Do not leave foreign objects lying on the motor. **D)** Change the rubber "0" Ring in the lid at 1 year intervals to maintain a good seal. The face on the leaf trap where the "0" Ring seats must be kept clean and smooth. **E) DO NOT RUN PUMP DRY or under closed valve conditions for extended periods. F)** Backwash your filter once a week, or when the pressure exceeds 50% above the starting operating pressure. **G)** No vaseline or petroleum based lubricants should be used for lubricating "0" Rings or seals. Only silicone paste should be used.

5) Filters & Automatic Pool Cleaning Devices

There are basically two types of filters i.e. pressure filters and vacuum filters. **A)** Pressure Filters: This type of filter is installed on the pressure discharge side of the pump. Most are fitted with a pressure gauge to indicate when the filter requires backwashing or cleaning, alternatively weekly backwashing is advised (refer to filter manufacturer's instructions). **B)** Vacuum Filters: This type of filter is fitted on the suction side of the pump and built into the weir of the swimming pool. This type of filter must be cleaned at least once a week. **C)** Automatic Cleaning Devices (APC): When such a device is fitted on the suction side of the pump, the pump and weir leaf traps must be cleaned at least once a day. When using such devices, a shortened bearing life of the pump motor can be expected, especially if the leaf trap is not cleaned regularly. **DO NOT USE an APC without a bypass or skimmer valve.**

GENERAL INFO
DETAILED INFO
EXPLODED VIEW
CROSS SECTION
PUMP CURVES
DIMENSIONS
ALL PUMPS

ecogene

eartheco recommends the use of **eco**gene **pool care products.**

Detailed Information



Installation, Operating, Maintenance Instructions & Warranty

6) Problem Diagnosis

Isolate the motor before checking for problems.

6.1 Motor fails to start:
A) Check that incoming mains wires are connected to the correct motor terminals. B) Check that the mains supply coming into the motor at the terminals corresponds with the data on the motor name plate. C) Remove the fan cowl of the motor or insert a screwdriver in the slot of the motor shaft at the fan end and check if the shaft can be rotated freely. If this is not the case, the motor will have to be removed to check if foreign objects are jammed in the impeller. D) Reset thermal overload (if fitted) at the reset button on motor terminal box.

6.2 Motor hums but will not start:
A) Remove the fan cowl of the motor or insert a screwdriver in the slot of the motor shaft at the fan end and check if the shaft can be rotated freely. If this is not the case, the motor will have to be removed to check for faulty bearings, or if foreign objects have become jammed in the impeller. If the shaft can be rotated, check that the capacitor is functioning. B) Check that phases of motor windings are not down to earth. If they are the motor has been wet or is burned out.

6.3 Pump runs but will not pump or pumps poorly
A) Check direction of rotation.
B) Make sure pump is properly primed.
C) Make sure correct valves are open.
D) Make sure that leaf trap and filter are clean. Backwash filter if necessary. E) Make sure that leaf trap lid and "0" Ring are sealing properly and that lid lock handle is tightened firmly. This can normally be diagnosed by air bubbles entering the pool at return point.

6.4 Water leaks from drain seal plate flange: The mechanical seal needs to be replaced.

6.5 Motor runs noisily:
A) Clean leaf trap and check for any obstruction on the suction line.
B) If this does not help, the motor bearings may need replacement.

GENERAL INFO
DETAILED INFO
EXPLODED VIEW
CROSS SECTION
PUMP CURVES
DIMENSIONS
ALL PUMPS

ecogene

eartheco recommends the use of **eco**gene **pool care products.**

Detailed Information



Installation, Operating, Maintenance Instructions & Warranty

7) Warranty

If the manual instructions, featured here, are adhered to, there will be many years of trouble-free pump operation.

eartheco will not be held liable for any damages, or delays caused by failure to comply with the provision of the manual, or accepted engineering practices.

NOTE: Warranty claims will be declared invalid if the content of the manual is not adhered to.

The warranty constitutes the entire warranty with respect to the goods and is in lieu of all other warranties, expressed or implied, including any implied warranty by distributors or sales persons and/or implied warranty of fitness for a particular purpose.

eartheco specifically warrants that all **earthe**co equipment products are free from defects in material and workmanship for a period of **24 months**.

The warranty period is calculated from the date of installation. Warranty periods for repaired or replaced goods remains at the period specified from the original installation date of the equipment.

This warranty is against defective materials and workmanship on the product and specifically does not cover travel / installation / labour costs associated with the removal and/or reinstallation of the product.

eartheco or its distributor's sole obligation to the end user under this warranty, will be at their option to:
1. repair **earthe**co products or parts found to be defective in material or workmanship. **OR** in unusual circumstances and only at their discretion,
2. replace **earthe**co products or issue a credit note at the purchase price for such defective goods / parts only.

WARNING

Pollution of the working fluid could occur due to leakage of lubricants.

GENERAL INFO
DETAILED INFO
EXPLODED VIEW
CROSS SECTION
PUMP CURVES
DIMENSIONS
ALL PUMPS

ecogene

eartheco recommends the use of **eco**gene **pool care products.**

eartheco® The natural selection

E-Que Pump & MOTOR COMPLETE

0.60kW **K71** | 0.75kW **K71** | 0.75kW **K80** | 1.10kW **K80**

Exploded View:
Parts & Part Numbers

E-QUE PUMP & MOTOR COMPLETE	PART NUMBER
0.60kW K71	02-EQP-060
0.75kW K71	02-EQP-075
0.75kW K80	02-EQP-076
1.10kW K80	02-EQP-110

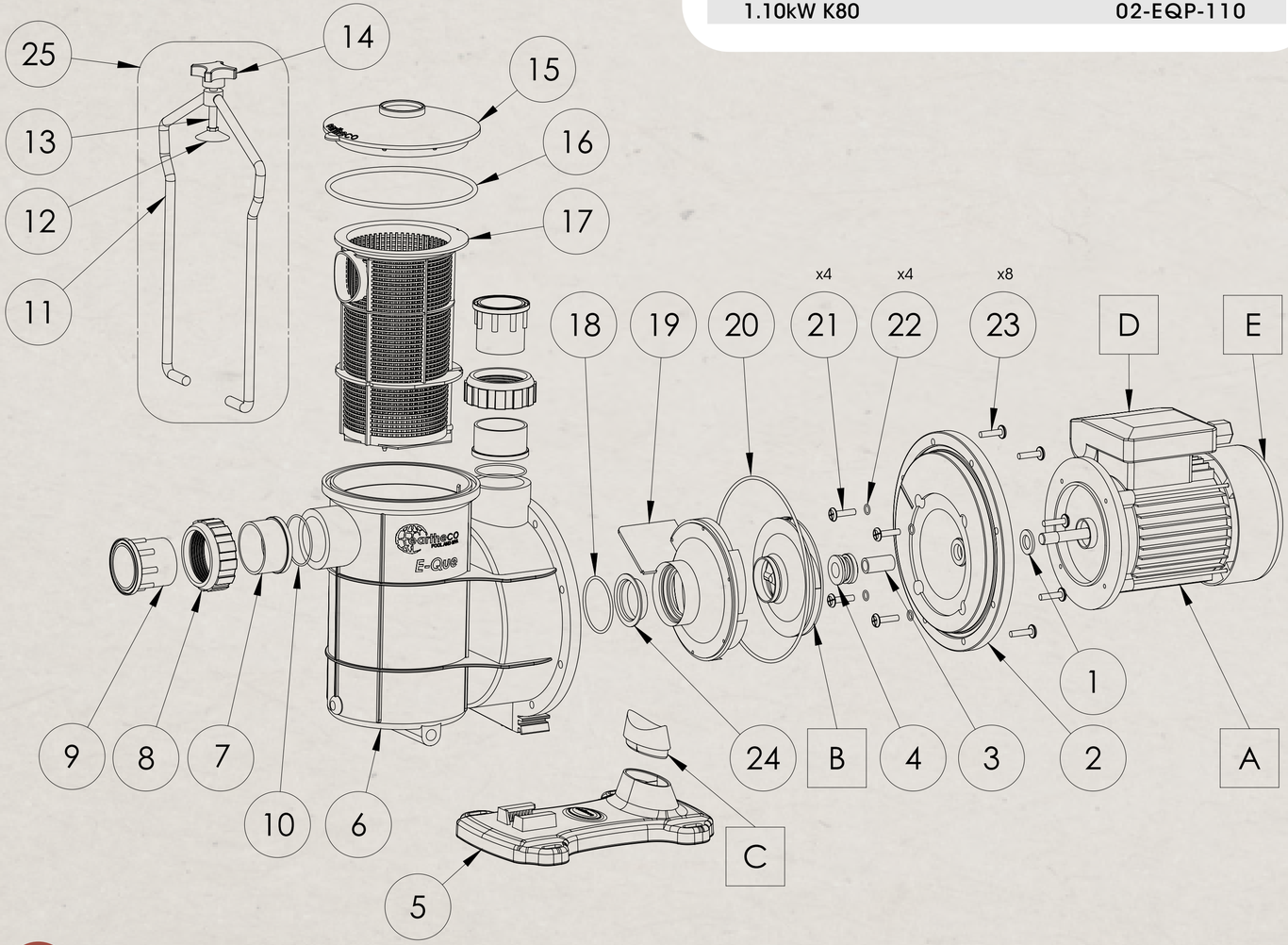

	PART DESCRIPTION	PART NUMBER
1	Flinger Ring	S02-SEA-019
2	Seal Plate Flange	S02-EQP-002
3	Brass Bush	S02-EQS-101
4	Mechanical Seal	S02-MSS-158
5	Pump Foot/Stand	S02-EPS-101
6	Pump Body/Sludge Trap	S02-EQP-001
7	50mm I/D Union Flange	S05-UNI-101
8	Union Nut Black	S05-UNI-303
9	50mm 0/D Union Flange	S05-UNI-202
10	Union O-ring	S02-SEA-018
11	E-Que Pump Clamp	S02-EQP-011
12	SWP10C Clamp Pad	25-254-55
13	SWP1OB Ball Screw Brass Stud	25-246-05
14	SWP10 Lid Lock Handle (knob)	25-018-29
15	Pump Lid	S02-LID-004
16	Pump Lid O-ring	S02-SEA-017
17	Basket	S02-BAS-005
18	Diffuser O-ring	S02-SEA-018
19	Diffuser	S02-EQP-003
20	Flange O-ring	S02-SEA-016
21	M8x30 Cheese Head Screw	S02-BWN-017
22	Flange Bolt 0-Ring	S02-SEA-020
23	M6x25 Hex Head Screw	S02-BWN-116
24	Diverter Ring	S02-PND-001
25	Clamp Arm Assembly	S02-EQP-006
A	1.1kW Motor	S02-EQM-011
	0.75kW Motor	S02-EQM-075
	0.6kW Motor	S02-EQM-060
B	1.1 kW Impeller	S02-EQI-011
	0.75kW Impeller	S02-EQI-075
	0.6 kW Impeller	S02-EQI-060
C	Foot Pad - 80 Frame	S02-EPS-002
	Foot Pad - 71 Frame	S02-EPS-002
D	Terminal Box - 80 Frame	25-158-28
	Terminal Box - 71 Frame	25-157-28
E	Fan Cowl - 80 Frame	25-106-19
	Fan Cowl - 71 Frame	25-105-19

CROSS SECTION VIEW

GENERAL **INFO**
DETAILED **INFO**
EXPLODED VIEW
CROSS **SECTION**
PUMP CURVES
DIMENSIONS
ALL **PUMPS**

eartheco® The natural selection

Cross Section View (unique features)

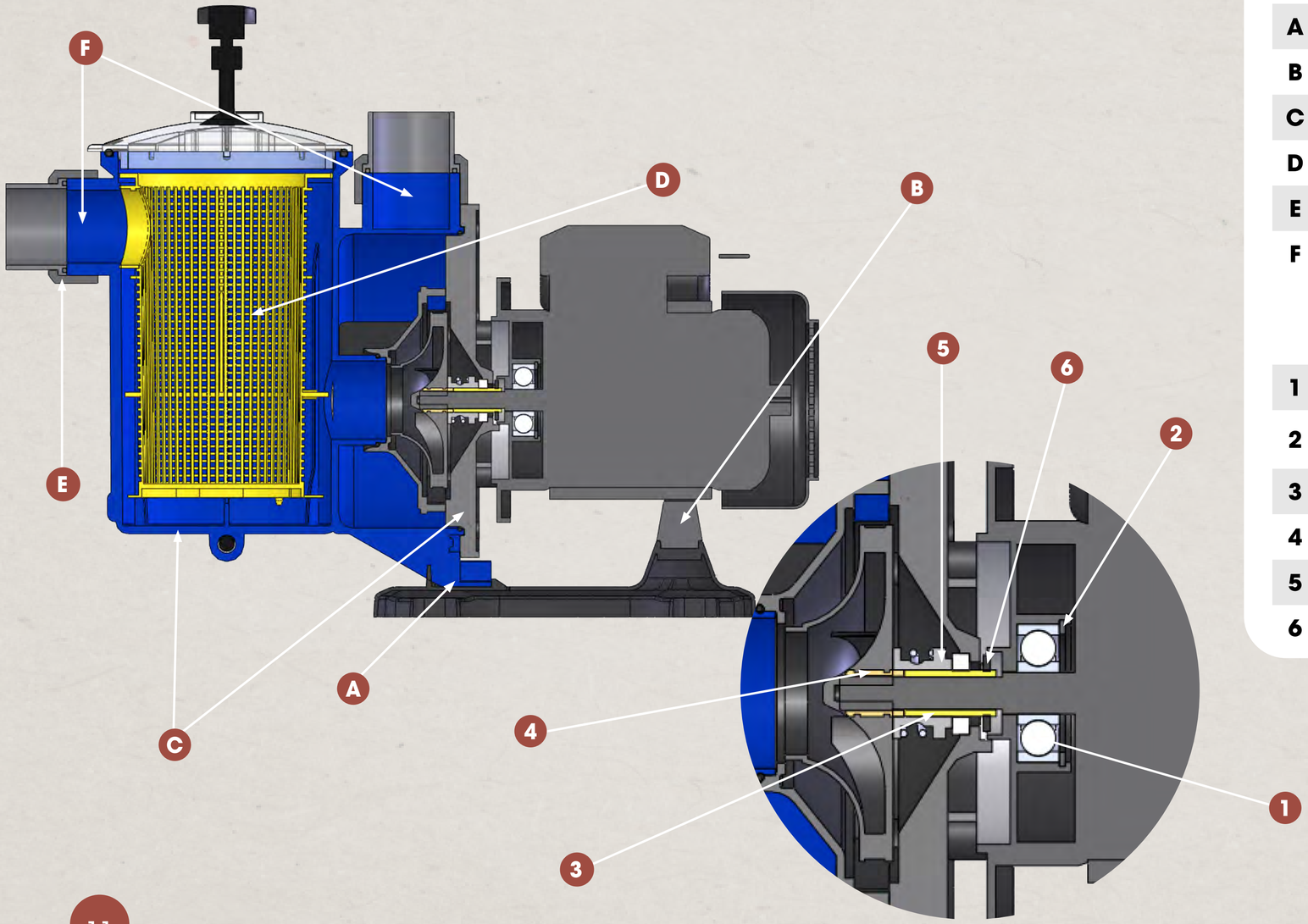

COMPLETE PUMP

A	Clip-on foot feature
B	Rubberised Motor Support
C	Reinforced Body and Seal Plate
D	Large Orientated Basket
E	50mm Union
F	Internal 1.5" BSP Thread

IMPELLER & SHAFT SEAL

1	Heavy Duty Ball Bearing
2	Bearing Retaining Clip [to limit axial movement]
3	Brass Sleeve
4	Brass Impeller Insert
5	High Quality Mechanical Seal
6	Flinger Ring

EXPLODED VIEW, PARTS & PART NUMBERS

GENERAL INFO
DETAILED INFO
EXPLODED VIEW
CROSS SECTION
PUMP CURVES
DIMENSIONS
ALL PUMPS

eartheco® The natural selection

Pump Curves:
Performance Graph



MAXIMUM TOTAL DYNAMIC HEAD (m)

SIZE (kW)	METERS (m)
0.60	14
0.75	16
1.10	17.5

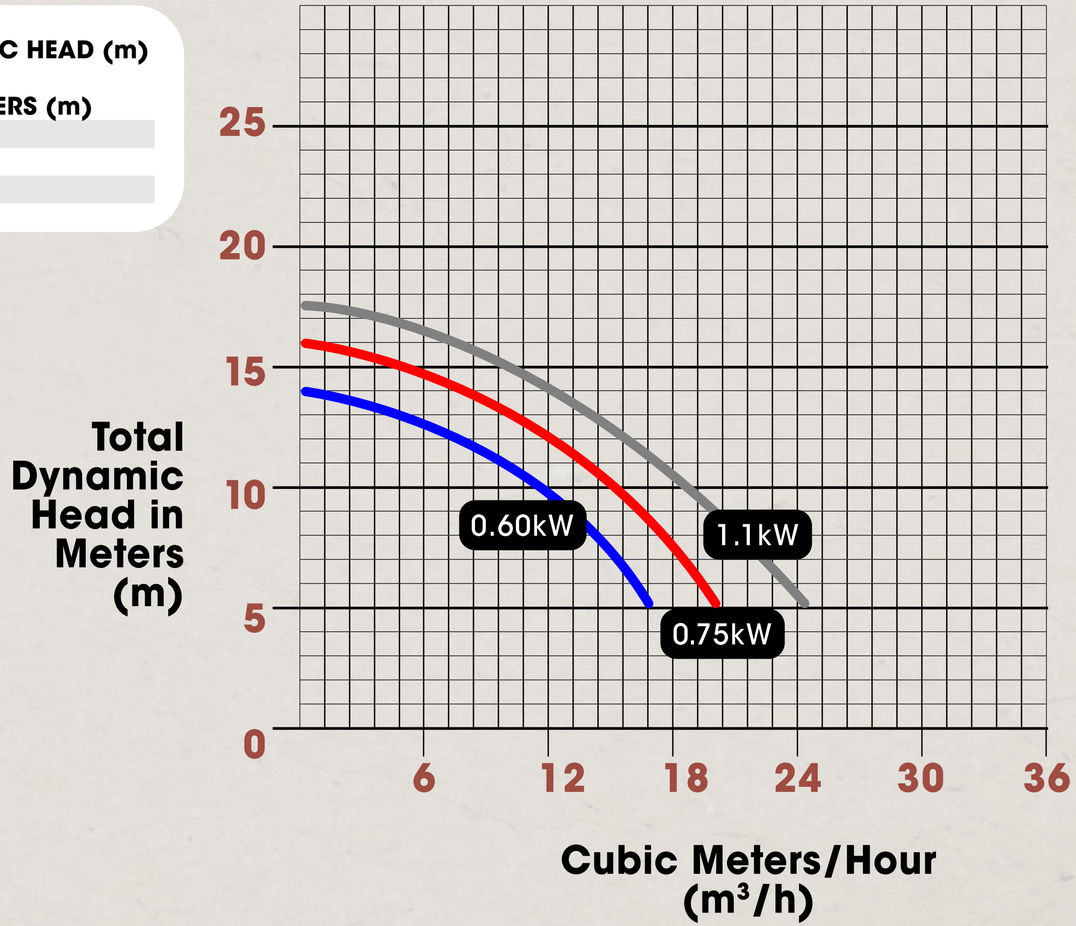

GENERAL INFO
DETAILED INFO
EXPLODED VIEW
CROSS SECTION
PUMP CURVES
DIMENSIONS
ALL PUMPS

eartheco® The natural selection

Dimensional Drawing

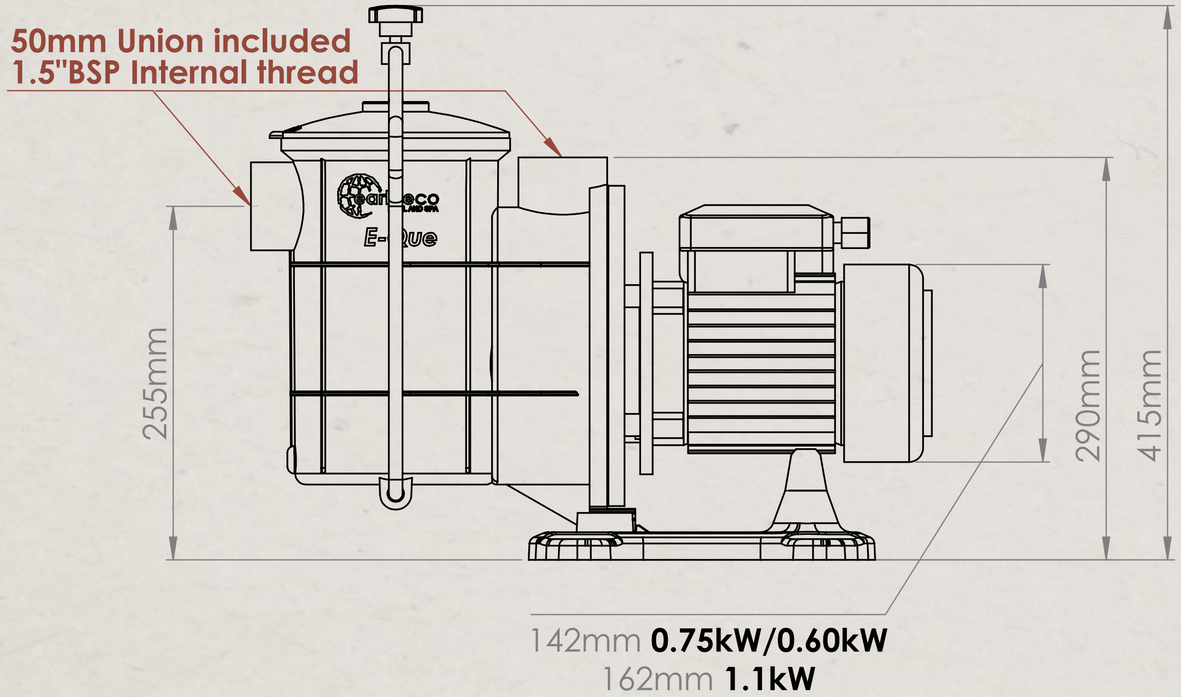

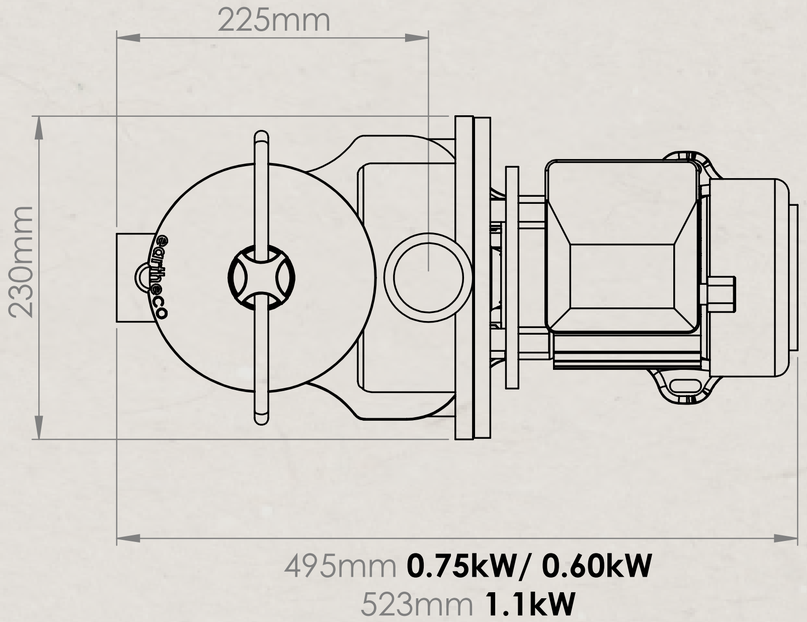

GENERAL **INFO**
DETAILED **INFO**
EXPLODED VIEW
CROSS **SECTION**
PUMP CURVES
DIMENSIONS
ALL **PUMPS**

eartheco® The natural selection

RD Pump & MOTOR COMPLETE

0.60kW | 0.75kW | 1.10kW | 0.75kW **380V** | 1.10kW **380V**

General

1) **Self Priming, Centrifugal Type Pumps** with open vane impellers.

- 0.60kW
- 0.75kW
- 1.10kW
- 0.75kW **380V**
- 1.10kW **380V**

- Fitted with leaf trap strainers, mechanical shaft seals and squirrel cage induction motors with heavy duty ball bearings.

The pump type and serial number are on a nameplate attached to the motor shroud, and the motor data is in a nameplate attached to the side of the motor.

Always quote pump type, serial number and motor make in any correspondence or when ordering spares.



GENERAL **INFO**
DETAILED **INFO**
EXPLODED VIEW
CROSS **SECTION**
PUMP CURVES
DIMENSIONS
ALL **PUMPS**

eartheco® The natural selection

Detailed Information



Installation, Operating, Maintenance Instructions & Warranty

2) Installation

A good installation of your pool pump will result in many years of trouble free operation. **Careful attention must be paid to the following:**

2.1 Piping

The suction and discharge pipes must not be smaller in diameter than the pump connection i.e. Suction pipe diameter(0) 50mm, discharge pipe diameter(0) 50mm minimum. On 1.1 kW & 1.5kW a suction pipe of 63mm should be used. Suitable unions should be placed in the lines adjacent to the pump connections in case the pump body has to be removed, where pump unions do not already perform this function. Do not support the pipework on the pump or vice versa. Make sure all pipe connections are completely water/air tight by using a suitable pipe jointing compound. Keep suction pipe as short as possible and only use pipes that are sufficiently rated to work at a minimum of 4 bar pressure. The suction line should enter the pump straight and horizontally for a length of at least 4 x the diameter of the pipe.

2.2 Pump Positioning

(Important for motor cooling)

We recommend that the pump be positioned at a level of no more than ± 300mm above your pool water level. Again we stress the fact to keep the suction line as short as possible. A minimum clearance of 150mm must be allowed behind the motor fan cowling to the nearest obstruction to ensure proper ventilation and easy access for servicing. The pump house/box must also have provision for adequate drainage facilities.

2.3 Ventilation

As the electric motor is fan cooled, sufficient ventilation must be allowed at all times during operation. Failure to do this will cause overheating resulting in premature bearing failure and/or motor burnout. If your pump house/box does not have ventilation holes the lid or door should be left open during operation of the pump.

GENERAL INFO
DETAILED INFO
EXPLODED VIEW
CROSS SECTION
PUMP CURVES
DIMENSIONS
ALL PUMPS

ecogene

eartheco recommends the use of **eco**gene **pool care products.**

eartheco® The natural selection

Detailed Information



Installation, Operating, Maintenance Instructions & Warranty

2.4 Drainage

Flooding of the electric motor is the most common cause of motor failure. It is essential that adequate drainage be provided in the pump house/box. If the motor fails as a result of flooding then there is no warranty whatsoever irrespective of how the water penetrated the motor. The pump must be protected from rain and flooding.

2.5 Electric Connections

These must be carried out by suitably qualified people only. Do not change the motor position as it is provided with a drain hole at the bottom to drain off any water which may leak past the mechanical shaft seal. A cable gland must be fitted to the terminal box. 3 phase pumps must be installed with an appropriately rated overload protection device. **NOTE**: The length of cable supplied with the pump is for testing only and should be replaced with suitably rated cable. Minimum specification 60245IEC66 (HO7RN-F).

2.6 Rotation

Before checking the rotation, drain the pump leaf trap of water. The correct rotation is clockwise when viewed from the motor end. Pumps with 220 volt single phase motors are wired at our factory for the correct rotation. 3 phase pumps require the rotation to be checked before operating to prevent a damaged impeller.

3) Commissioning

A) Remove the clear leaf trap lid and fill the pump with water at the leaf trap until it flows out of the suction pipe connection. The thumb screw that holds down the leaf trap lid must only be hand tightened. Do not use a spanner, pliers or pipe wrench. **B)** switch on the pump and allow to run. The pump will take a short while to prime fully and then deliver full quantity. The pump must run smoothly and quietly. The pump should need no further priming by hand. On 380 volt motors check the rotation corresponds with the arrow on the fan cowl.

[continues onto next page]

ecogene

eartheco recommends the use of **eco**gene **pool care products.**

eartheco®
The natural selection

Detailed Information



Installation, Operating, Maintenance Instructions & Warranty

C) Diatomaceous earth(D.E.) filters should now be charged by pouring the D.E. into the weir of the swimming pool. **D)** Sand filters must be filled with water, then charged with sand directly into the filter and not through the pump or the weir. **E)** The motor temp. under normal conditions will rise to approximately 40°C above the ambient temp.

4) Hints for Good Running

A) Clean the leaf trap in the pump and pool weir regularly. **B)** Do not allow dust to accumulate on the motor as this affects the cooling process. **C)** Do not leave foreign objects lying on the motor. **D)** Change the rubber "0" Ring in the lid at 1 year intervals to maintain a good seal. The face on the leaf trap where the "0" Ring seats must be kept clean and smooth. **E) DO NOT RUN PUMP DRY or under closed valve conditions for extended periods. F)** Backwash your filter once a week, or when the pressure exceeds 50% above the starting operating pressure. **G)** No vaseline or petroleum based lubricants should be used for lubricating "0" Rings or seals. Only silicone paste should be used.

5) Filters & Automatic Pool Cleaning Devices

There are basically two types of filters i.e. pressure filters and vacuum filters. **A)** Pressure Filters: This type of filter is installed on the pressure discharge side of the pump. Most are fitted with a pressure gauge to indicate when the filter requires backwashing or cleaning, alternatively weekly backwashing is advised (refer to filter manufacturer's instructions). **B)** Vacuum Filters: This type of filter is fitted on the suction side of the pump and built into the weir of the swimming pool. This type of filter must be cleaned at least once a week. **C)** Automatic Cleaning Devices (APC): When such a device is fitted on the suction side of the pump, the pump and weir leaf traps must be cleaned at least once a day. When using such devices, a shortened bearing life of the pump motor can be expected, especially if the leaf trap is not cleaned regularly. **DO NOT USE an APC without a bypass or skimmer valve.**

GENERAL INFO
DETAILED INFO
EXPLODED VIEW
CROSS SECTION
PUMP CURVES
DIMENSIONS
ALL PUMPS

ecogene

eartheco recommends the use of **eco**gene **pool care products.**

Detailed Information



Installation, Operating, Maintenance Instructions & Warranty

6) Problem Diagnosis

Isolate the motor before checking for problems.

6.1 Motor fails to start:
A) Check that incoming mains wires are connected to the correct motor terminals. B) Check that the mains supply coming into the motor at the terminals corresponds with the data on the motor name plate. C) Remove the fan cowl of the motor or insert a screwdriver in the slot of the motor shaft at the fan end and check if the shaft can be rotated freely. If this is not the case, the motor will have to be removed to check if foreign objects are jammed in the impeller. D) Reset thermal overload (if fitted) at the reset button on motor terminal box.

6.2 Motor hums but will not start:
A) Remove the fan cowl of the motor or insert a screwdriver in the slot of the motor shaft at the fan end and check if the shaft can be rotated freely. If this is not the case, the motor will have to be removed to check for faulty bearings, or if foreign objects have become jammed in the impeller. If the shaft can be rotated, check that the capacitor is functioning. B) Check that phases of motor windings are not down to earth. If they are the motor has been wet or is burned out.

6.3 Pump runs but will not pump or pumps poorly
A) Check direction of rotation.
B) Make sure pump is properly primed.
C) Make sure correct valves are open.
D) Make sure that leaf trap and filter are clean. Backwash filter if necessary. E) Make sure that leaf trap lid and "0" Ring are sealing properly and that lid lock handle is tightened firmly. This can normally be diagnosed by air bubbles entering the pool at return point.

6.4 Water leaks from drain seal plate flange: The mechanical seal needs to be replaced.

6.5 Motor runs noisily:
A) Clean leaf trap and check for any obstruction on the suction line.
B) If this does not help, the motor bearings may need replacement.

GENERAL INFO
DETAILED INFO
EXPLODED VIEW
CROSS SECTION
PUMP CURVES
DIMENSIONS
ALL PUMPS

ecogene

eartheco recommends the use of **eco**gene **pool care products.**

Detailed Information



Installation, Operating, Maintenance Instructions & Warranty

7) Warranty

If the manual instructions, featured here, are adhered to, there will be many years of trouble-free pump operation.

eartheco will not be held liable for any damages, or delays caused by failure to comply with the provision of the manual, or accepted engineering practices.

NOTE: Warranty claims will be declared invalid if the content of the manual is not adhered to.

The warranty constitutes the entire warranty with respect to the goods and is in lieu of all other warranties, expressed or implied, including any implied warranty by distributors or sales persons and/or implied warranty of fitness for a particular purpose.

eartheco specifically warrants that all **earthe**co equipment products are free from defects in material and workmanship for a period of **24 months**.

The warranty period is calculated from the date of installation. Warranty periods for repaired or replaced goods remains at the period specified from the original installation date of the equipment.

This warranty is against defective materials and workmanship on the product and specifically does not cover travel / installation / labour costs associated with the removal and/or reinstallation of the product.

eartheco or its distributor's sole obligation to the end user under this warranty, will be at their option to:
1. repair **earthe**co products or parts found to be defective in material or workmanship. **OR** in unusual circumstances and only at their discretion,
2. replace **earthe**co products or issue a credit note at the purchase price for such defective goods / parts only.

WARNING
Pollution of the working fluid could occur due to leakage of lubricants.

GENERAL INFO
DETAILED INFO
EXPLODED VIEW
CROSS SECTION
PUMP CURVES
DIMENSIONS
ALL PUMPS

ecogene

eartheco recommends the use of **eco**gene **pool care products.**

eartheco® The natural selection

Exploded View:
Parts & Part Numbers

RD PUMP & MOTOR COMPLETE	PART NUMBER
0.60kW Complete	SWP-2525-432
0.75kW Complete	SWP-2525-433
1.10kW Complete	SWP-2525-434
0.75kW Complete 380V	SWP-2525-435
1.10kW Complete 380V	SWP-2525-436

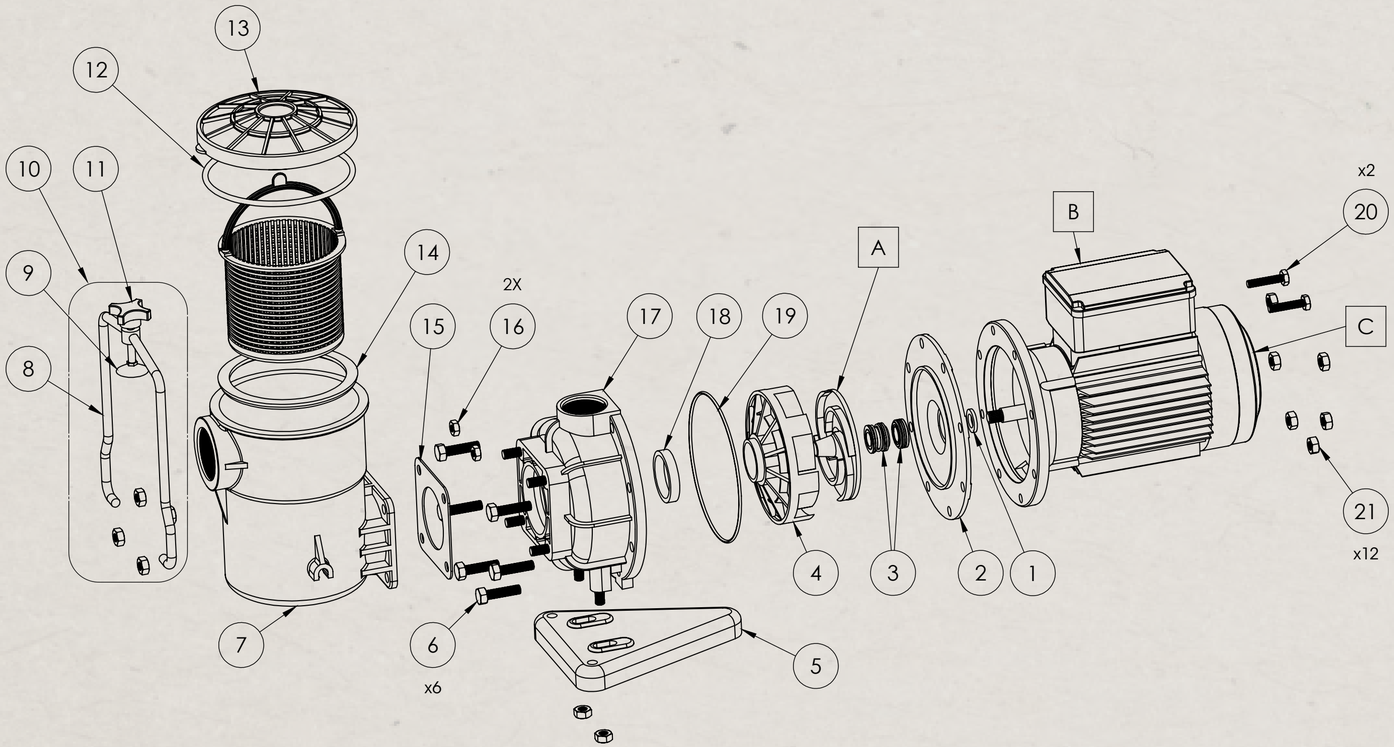

	PART DESCRIPTION	PART NUMBER
1	SWP27 Flinger Ring	25-033-30
2	SWP2 Seal Plate (8 Hole)	25-128-29
3	SWP22 Mechanical Seal 5/8" (RD.CP937A)	58-007-52
4	SWP5 Diffuser Ring	25-007-29
5	SWP9 Base	25-219-29
6	SWP15 Bolt M10x40 Galv. (cadmium plated)	56-038-19
7	SWP7 Sludge Trap (machined)	25-249-55
8	SWP26B Sludge Trap Handle (only)	25-032-66
9	SWP10C Clamp Pad Polyprop	25-246-55
10	Clamp Arm Complete	25-250-19
11	SWP10 Lid Lock Handle Complete	25-018-29
12	SWP11 Sludge Trap Lid 0-Ring (153x6.5)	25-020-30
13	SWP8 Sludge Trap Lid	25-241-56
14	SWP7A Sludge Trap Retaining Ring	25-175-55
15	SWP12 Sludge Trap Gasket Square	25-021-30
16	M8 Nut S/Steel 316	S02-BWN-004
17	SWP6 Body Complete with Stud (blue)	25-176-32
18	SWP13 Seal Ring	25-022-30
19	SWP 14C Body 0-Ring 164x3.5 (new)	25-261-30
20	SWP Bolt M8 x 40mm Galv. (cadmium plated)	S02-BWN-005
21	M10 Nuts S/Steel	S02-BWN-007
22	SWP26A Sludge Trap Basket (only)	25-032-65
A	SWP1 Impeller 0.60kW	25-124-29
	SWP1 Impeller 0.75kW	25-126-29
	SWP1 Impeller 1.10kW	25-178-29
B	Motor 0.75kW 220V (RD pump) Bare Shaft	25-034-26
	SWP1 Impeller 0 75kW	25-126-26
C	Fan eartheco Motor Frame K71	25-235-28
	Fan eartheco Motor Frame K80 (1.1)	25-149-28

CROSS SECTION VIEW

GENERAL INFO
DETAILED INFO
EXPLODED VIEW
CROSS SECTION
PUMP CURVES
DIMENSIONS
ALL PUMPS

eartheco® The natural selection

Cross Section View (unique features)

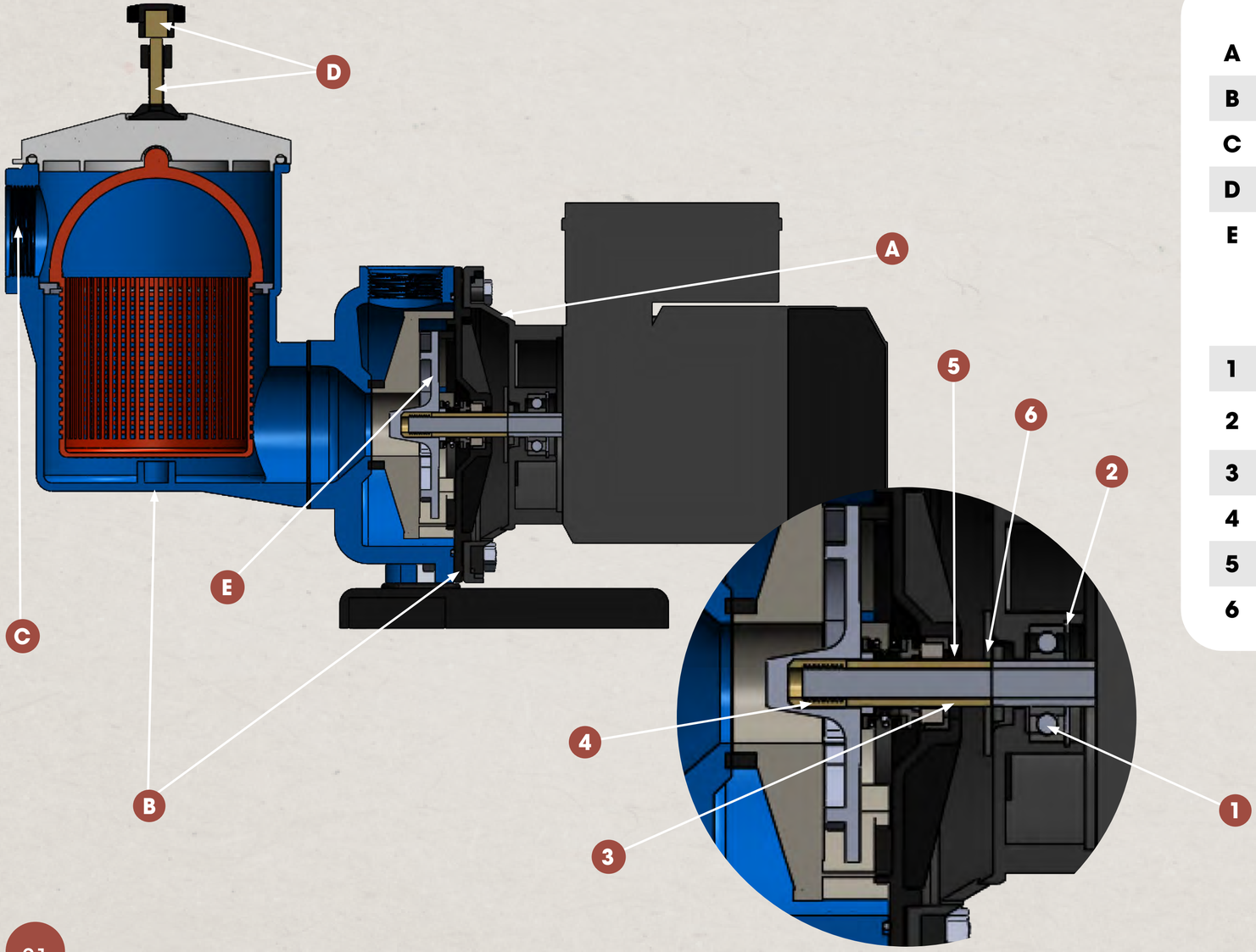

COMPLETE PUMP

A	Large Diameter Motor Flange
B	Reinforced body and seal plate
C	Large 2″ BSP Intake
D	Brass Ball Screw and Insert
E	Highly Reinforced Open Impeller

IMPELLER & SHAFT SEAL

1	Heavy Duty Ball Bearing
2	Bearing Retaining Clip [to limit axial movement]
3	Brass Sleeve
4	Brass Impeller Insert
5	High Quality Mechanical Seal
6	Flinger Ring

EXPLODED VIEW, PARTS & PART NUMBERS

GENERAL INFO
DETAILED INFO
EXPLODED VIEW
CROSS SECTION
PUMP CURVES
DIMENSIONS
ALL PUMPS

eartheco® The natural selection

Pump Curves:
Performance Graph



MAXIMUM TOTAL DYNAMIC HEAD (m)

SIZE (kW)	METERS (m)
0.60	17.5
0.75	17.5
1.10	18

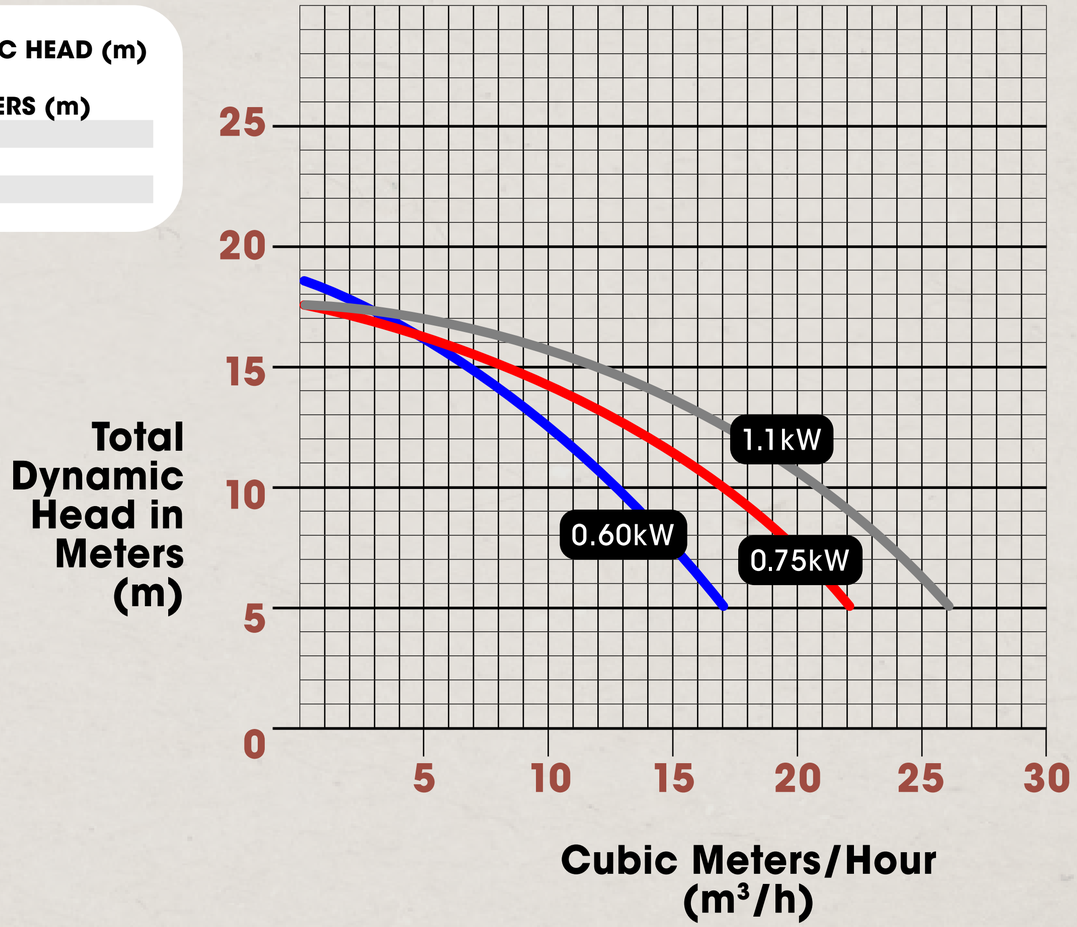

GENERAL **INFO**
DETAILED **INFO**
EXPLODED VIEW
CROSS **SECTION**
PUMP CURVES
DIMENSIONS
ALL **PUMPS**

eartheco® *The natural selection*

Dimensional Drawing

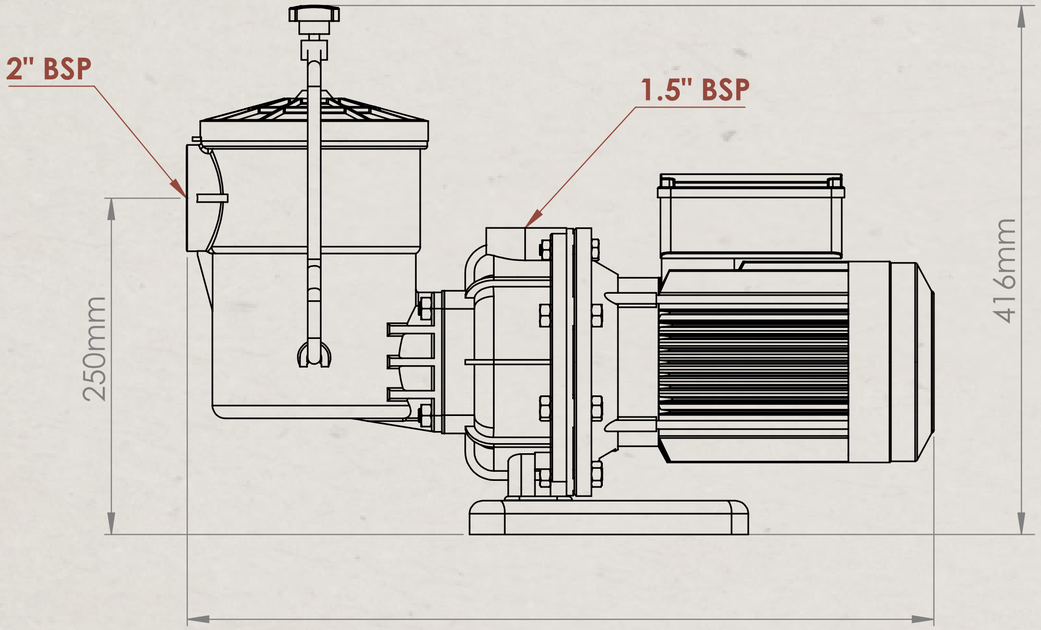

546mm **0.75kW/ 0.6kW**
570mm **1.1kW**

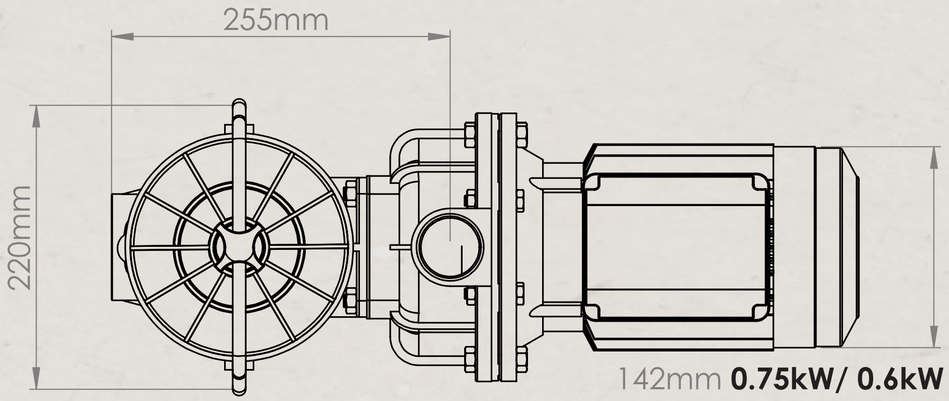

142mm **0.75kW/ 0.6kW**
162mm **1.1kW**

GENERAL **INFO**
DETAILED **INFO**
EXPLODED VIEW
CROSS **SECTION**
PUMP CURVES
DIMENSIONS
ALL **PUMPS**

eartheco®
The natural selection

eartheco – contact us

PROVIDING EXCEPTIONAL EQUIPMENT TO THE SWIMMING POOL TRADE SINCE 2002.

Telephone	**011 300 9917/8/9**
Address	**Lanseria Corporate Estate** (off Malibongwe Drive R512 – aka Pelindaba Rd) **Cnr Electron Lane & Falcon Lane** (within Lanseria Corporate Estate)
General	**info@eartheco.co.za**
Sales	**sales@eartheco.co.za**
Support	**support@eartheco.co.za**
Administration	**admin@eartheco.co.za**
Website	**www.eartheco.co.za**

eartheco®
The natural selection



eartheco®

The natural selection