AQUAGEM®

INVERTER POOL PUMP

INSTALLATION AND OPERATION MANUAL



CONTENTS

1. ⚠ IMPORTANT SAFETY INSTRUCTIONS 1

2. TECHNICAL SPECIFICATIONS 3

3. OVERALL DIMENSION (mm) 3

4. INSTALLATION 4

5. SETTING AND OPERATION 6

6. EXTERNAL CONTROL (OPTIONAL) 11

7. PROTECTION AND FAILURE 12

8. MAINTENANCE 14

9. WARRANTY& EXCLUSIONS 15

10. DISPOSAL 15

THANK YOU FOR PURCHASING OUR INVERTER POOL PUMPS.

THIS MANUAL CONTAINS IMPORTANT INFORMATION THAT WILL HELP YOU IN OPERATING AND MAINTAINING THIS PRODUCT.

PLEASE READ THE MANUAL CAREFULLY BEFORE INSTALLATION & OPERATION AND RETAIN IT FOR FUTURE REFERENCE.

1. ⚠ IMPORTANT SAFETY INSTRUCTIONS

This guide provides installation and operation instructions for this pump. If you have any other questions about this equipment, please consult your supplier.

When installing and using this electrical equipment, basic safety precautions should always be followed, including the following:

1.1 IEC

This appliance is not intended for use by persons (including children) with reduced physical, sensory or mental capabilities, or lack of experience and knowledge, unless they have been given supervision or instruction concerning use of the appliance by a person responsible for their safety.

Children should be supervised to ensure that they do not play with the appliance.

1.2 EN/UKCA

This appliance can be used by children aged from 8 years and above and persons with reduced physical, sensory or mental capabilities or lack of experience and knowledge if they have been given supervision or instruction concerning use of the appliance in a safe way and understand the hazards involved.

Children shall not play with the appliance.

Cleaning and user maintenance shall not be made by children without supervision.

1.3 If the supply cord is damaged, it must be replaced by the manufacturer, its service agent or similarly qualified persons in order to avoid a hazard.

1.4 The pump must not be used when people are staying in the water.

1.5 The pump must supplied through a residual current device (RCD) with a rated residual operating current ≤ 30 mA.

1.6 Electrical installation and include reference to national wiring rules.

1.7 Means for disconnection incorporated in fixed wiring in accordance with wiring rules.

1.8 Risk of electrical shock. Connect only to a branch circuit protected by a ground-fault circuit-interrupter (GFCI). Contact a professionally trained and qualified electrician if you cannot verify that the circuit is protected by a GFCI.

1.9 To prevent the risk of electrical shock, please connect the ground wire on the motor (green/yellow) to the grounding system.

1.10 This pump is for use with permanently installed in-ground or above-ground swimming pools and may also be used with hot tubs and spas with a water temperature under 50℃. Due to the fixed installation method, this pump is not suggested to be used on above-ground pools that can be readily disassembled for storage.

1.11 The pump is not submersible.

1.12 Never open the inside of the drive motor enclosure.

⚠ **WARNING:**

- Fill the pump with water before starting. Do not run the pump dry. In case of dry run, mechanical seal will be damaged and the pump will start leaking.
- Before servicing the pump, switch OFF power to the pump by disconnecting the main circuit to the pump and release all pressure from pump and piping system.
- Never tighten or loosen screws while the pump is operating.
- Ensure that the inlet and outlet of the pump are unblocked with foreign matter.

2. TECHNICAL SPECIFICATIONS

Model	Advised Pool Volume (m^3)	P1 KW	Voltage (V/Hz)	Qmax (m^3/h)	Hmax (m)	Circulation (m^3/h)	
						At 8m	At 10m
DE14	20-40	0.60	220-240/ 50/60	18.0	14.0	14.5	9.0
DE18	30-50	0.75		21.0	16.0	18.0	14.0
DE22	40-70	1.00		25.5	18.0	22.0	18.0

3. OVERALL DIMENSION (mm)

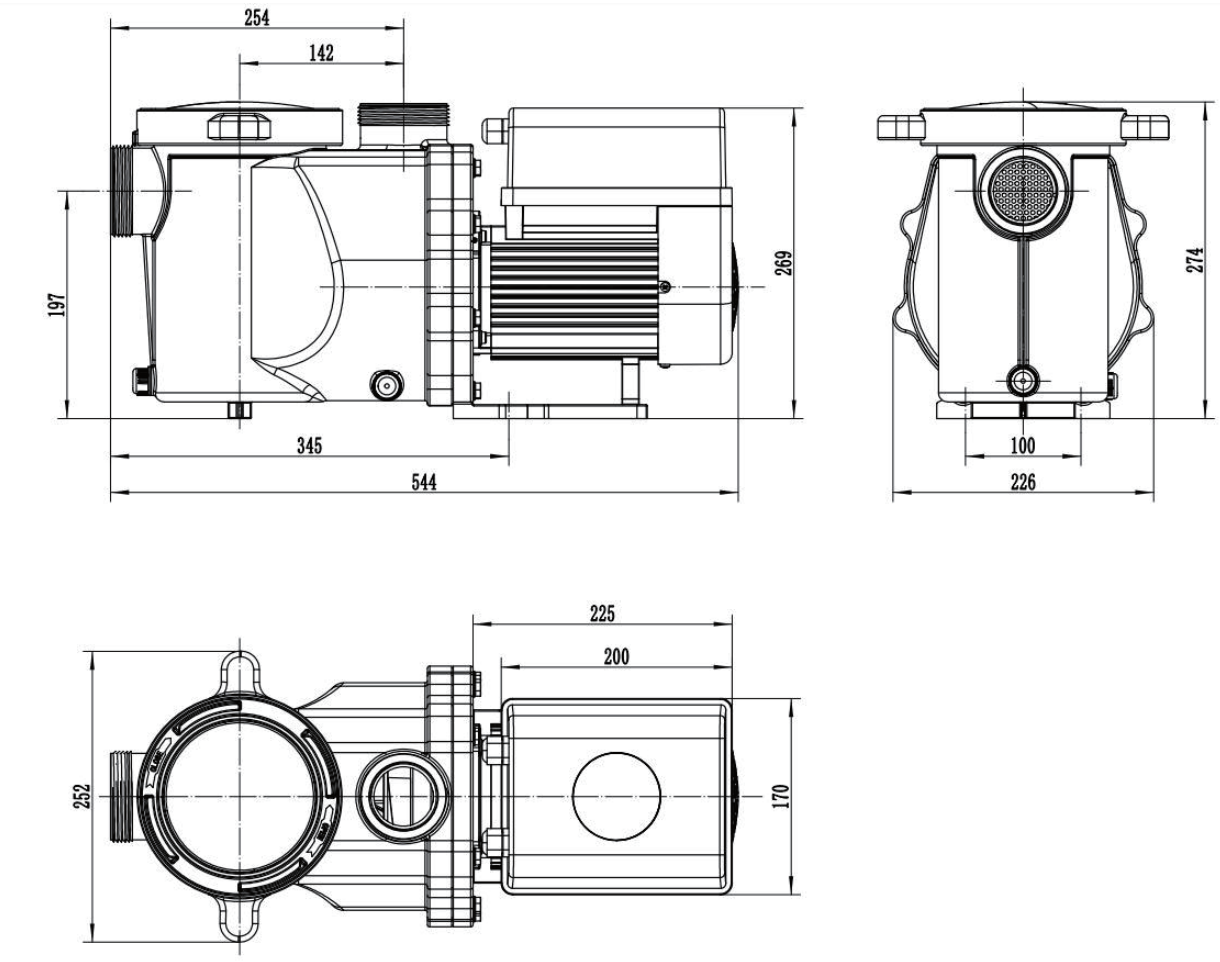

Figure 1

4. INSTALLATION

4.1. Pump Location

1) Install the pump as close to the pool as possible, to reduce friction loss and improve efficiency, use short, direct suction and return piping.

2) To avoid direct sunshine, heat or rain, it is recommended to place the pump indoors or in the shade.

3) DO NOT install the pump in a damp or non-ventilated location. Keep pump and motor at least 150mm away from obstacles, pump motors require free circulation of air for cooling.

4) The pump should be installed horizontally and fixed in the hole on the support with screws to prevent unnecessary noise and vibration.

4.2. Piping

1) For optimization of the pool plumbing, it is recommended to use a pipe with size of 63mm. When installing the inlet and outlet fittings (joints), use the special sealant for PVC material.

2) The dimension of suction line should be the same or larger than the inlet line diameter, to avoid pump sucking air, which will affect the efficiency of the pump.

3) Plumbing on the suction side of the pump should be as short as possible.

4) For most installations we recommend installing a valve on both the pump suction and return lines, which is more convenient for routine maintenance. However, we also recommend that a valve, elbow, or tee installed on the suction line should be no closer to the front of the pump than seven times the suction line diameter.

5) Pump outlet piping system should be equipped with a check valve to prevent the pump from the impact of medium recirculation and pump-stopping water hammer.

4.3. Valves and Fittings

1) Elbows should be no closer than 350mm to the inlet. Do not install 90° elbows directly into the pump inlet/outlet. Joints must be tight.

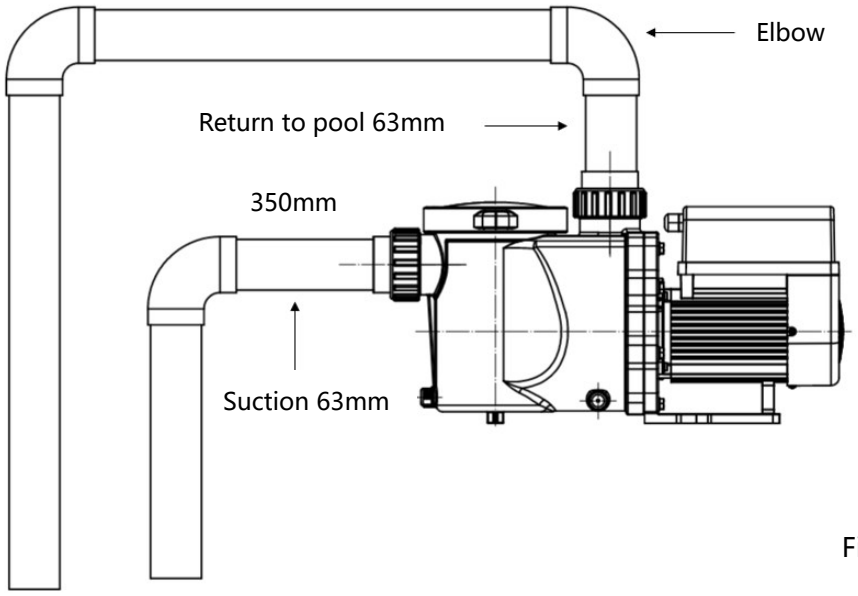

Figure 2

* The pump inlet/outlet union size: optional with 48.5/50/60.3/63mm

2) Flooded suction systems should have gate valves installed on suction and return line for maintenance; however, the suction gate valve should be no closer than seven times the suction pipe diameter as described in this section.

3) Use a check valve in the return line where there is a significant height between the return line and the outlet of the pump.

4) Be sure to install check valves when plumbing in parallel with other pumps. This helps prevent reverse rotation of the impeller and motor.

4.4 Check before initial startup

1) Check whether the pump shaft rotates freely;

2) Check whether the power supply voltage and frequency conform to the nameplate;

3) Facing the fan blade, the direction of motor rotation should be clockwise;

4) It is forbidden to run the pump without water.

4.5 Application conditions

Ambient temperature	Indoor installation, pump is intended for continuous operation at this temperature range: -10 - 40℃
Water temperature	5℃-50℃
Salt pools	Salt concentration up to 0.5%, i.e 5g/l
Humidity	≤90% RH, (20℃±2℃)
Altitude	Not exceed 1000m above sea level
Installation	The pump can be installed max. 2m above water level;
Insulation	Class F, IP55

5. SETTING AND OPERATION

5.1 Display on control panel:

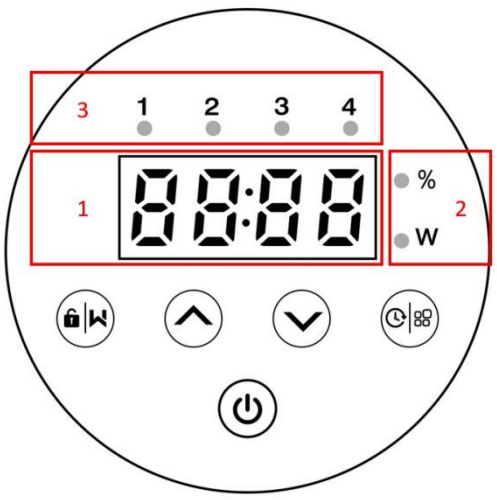

① Running capacity / power display

② Running capacity / power indicator

③ Timer indicator 1/2/3/4

Backwash / unlock

Up / down: to change the value of the setting

Timer setting / power reading

On/off

5.2 Startup:

When the power is switched on, the screen will fully light up for 3 seconds, the device code will be displayed, and then it will enter the normal working state. When the screen is locked, only the button  will light up; Press and hold  for more than 3 seconds to unlock the screen. The screen will automatically lock up when there is no operation for more than 1 minute and the brightness of the screen will be reduced to 1/3 of the normal display. Short press  to wake up the screen and observe the relevant operating parameters.

5.3 Self-priming

When switched on for the first time after installation, the pump will start self-priming.

When the pump performs self-priming, it will count down from 1500s and stop automatically when the system detects the pump is full of water, then the system will recheck for 30s again to make sure the self-priming is completed.

Users can exit self-priming manually by pressing  for more than 3 seconds. The pump will run at the default 80% speed at the initial startup. If the user exits the self-priming in the subsequent startup, the pump will return to the previous state before the last shutdown.

Remark:

The pump is delivered with self-priming enabled. Each time the pump restarts, it will perform self-priming automatically. Users can enter the parameter setting to disable the default self-priming function (see 5.7)

If the default self-priming function is disabled, and the pump has not been used for a long time, the water level in the strainer basket may drop. Users can manually activate the self-priming function by pressing both   for 3 seconds, the adjustable period is from 600s to 1500s (default value is 600s). After the manual self-priming is completed, the pump will return to the previous state before activating the manual self-priming.

User can press  for more than 3 seconds to exit the manual self-priming.

5.4 Backwash

Users can start the backwash or fast re-circulation in any running state by pressing .

	Default	Setting range
Time	180s	Press  or  to adjust from 0 to 1500s with 30 seconds for each step
Running capacity	100%	80-100%, enter the parameter setting (see 5.7)

Exit backwash:

When backwash mode is on, users can hold  for 3 seconds to exit, the pump will return to the previous state before backwash.

5.5 Running Capacity Setting

1		Hold  for more than 3 seconds to unlock the screen;
2		Press  to start. The pump will run at 80% of the running capacity at the initial startup after the self-priming.
3		Press  or  to set the running capacity between 30%-100%, each step by 5%
4		Hold  for more than 3 seconds to read the real-time power. It will return to the running capacity display after 10s without operation.

Note:

a. When the running capacity is adjusted, the system will save the latest parameter automatically.
b. When setting 100% speed, the pump will increase the speed automatically if the pipeline resistance is high, but will not exceed the rated power of each model.

5.6 Timer mode

The pump' s on/off and running capacity could be commanded by timer, which could be programmed daily as needed. Maximum 4 timers can be set on the control panel.

1	Enter timer setting by pressing 
2	Press  or  to set the local time. Press  to confirm and move to timer-1 setting
3	When enter the timer-1 setting, the timer indicator 1 will light up. "StA" will be shown on the screen. Press  to proceed and then press  or  to set the start time of timer-1 (with 30 minutes for each step), press  to confirm.
4	When the start time of timer 1 is confirmed, "End" will be shown on the screen. Press  to proceed and then press  or  to set the end time of timer-1 (with 30 minutes for each step), press  to confirm.
5	When the end time of timer 1 is confirmed, "SPd" will be shown on the screen. Press  to proceed and then press  or  to set the running capacity of timer-1 (30% - 100%, each step by 5%), press  to confirm.
6	When the timer 1 setting is completed, repeat steps 3 – 5 to complete the setting of timer 2 – 4.

Note:

When timer mode is activated, if the set time period contains the current time, the pump will start running according to the set running capacity and the corresponding timer indicator (1 or 2 or 3 or 4) will stay on, and the set running capacity will be shown on the screen.

If the set time period does not contain the current time, the timer indicator (1 or 2 or 3 or 4) that is about to start running will light up and flash, and the current time will be shown on the screen.

During the timer setting, if users want to return to the previous setting item, hold both   for 3 seconds. If users don' t need 4 timers, they can hold  for 3 seconds after completing the setting of the specific timer, the system will automatically save the current set value and activate the timer mode.

When the timer mode is on, users can check the setting of each timer. Press  to select the specific timer (1 or 2 or 3 or 4), and the corresponding timer indicator will light up. Then press  to check the start time, end time, and running capacity setting of the selected timer.

Users can hold  for 3 seconds to read the real-time power and it will return to the timer display after 10s without operation. Users can exit the timer mode by holding  for 3 seconds.

5.7 Parameter Setting

Restore factory setting	Under OFF mode, hold both   for 3 seconds
Check the software version	Under OFF mode, hold both   for 3 seconds
Manual priming	Under ON mode, hold both   for 3 seconds
Enter the parameter setting	Under OFF mode, hold both   for 3 seconds to enter the parameter setting. The parameter address (on the left) and default setting value (on the right) will flash alternately on the screen. Users can press  or  to adjust the current value, and hold both   for 3 seconds to the next parameter address. It will exit the parameter setting after 10 seconds without operation.

Parameter Address	Description	Default Setting	Setting Range
1	PIN3	100%	30-100%, by 5% increments
2	PIN2	80%	30-100%, by 5% increments
3	PIN1	40%	30-100%, by 5% increments
4	Backwash capacity	100%	80-100%, by 5% increments
5	Enable or disable the priming that occurs at each start	25	25:enables 0: disables

6. EXTERNAL CONTROL (OPTIONAL)

External control can be enabled via following contacts.

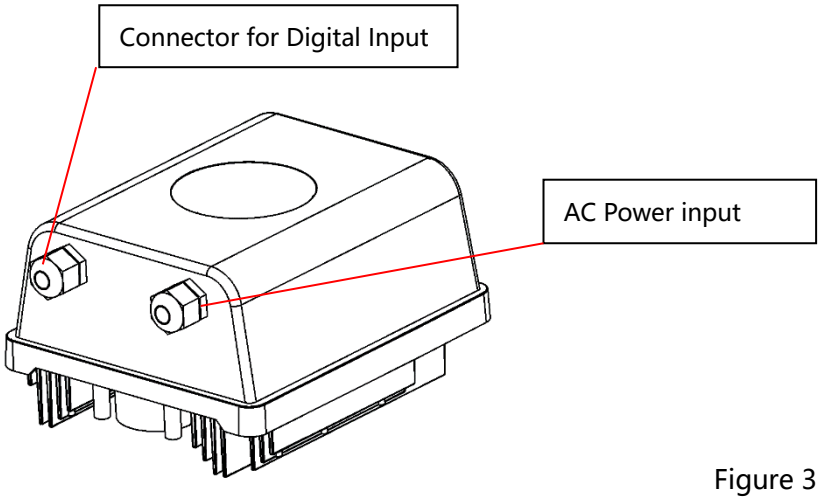

Figure 3

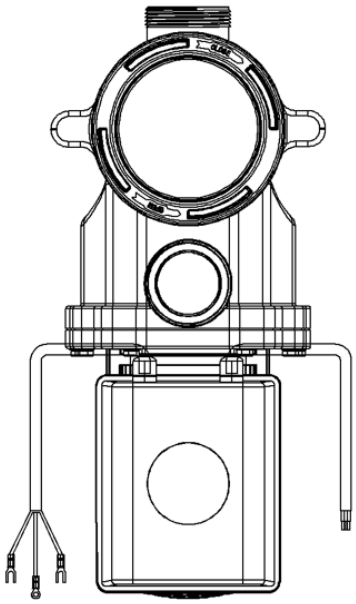

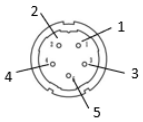

5 PINs connector

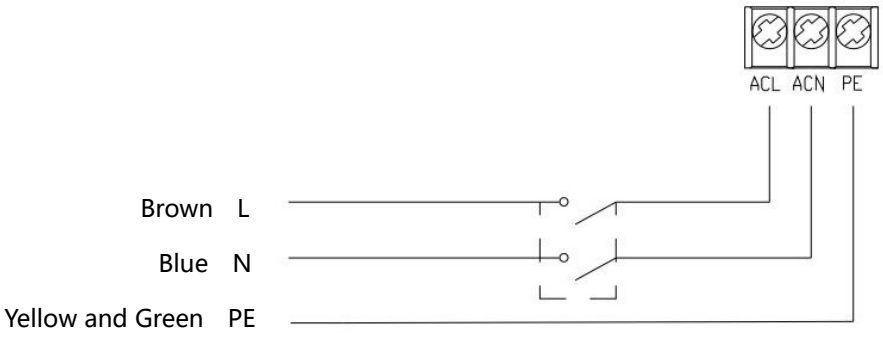

Figure 4

Name	Color	Description
PIN 1	Red	Digital Input 4
PIN 2	Black	Digital Input 3
PIN 3	White	Digital Input 2
PIN 4	Grey	Digital Input 1
PIN 5	Yellow	Digital Ground

Digital input

Running capacity is determined by the state of digital input,

When PIN4 connects with PIN5, the pump will be mandatory to stop; if disconnected, the digital control will be invalid;

When PIN3 connects with PIN5, the pump will be mandatory to run at 100%; if disconnected, the control priority will be back on panel control;

When PIN2 connects with PIN5, the pump will be mandatory to run at 80%; if disconnected, the control priority will be back on panel control;

When PIN1 connects with PIN5, the pump will be mandatory to run at 40%; if disconnected, the control priority will be back on panel control;

The capacity of inputs (PIN1/PIN2/PIN3) could be modified according to the parameter setting.

7. PROTECTION AND FAILURE

7.1 High Temperature Warning and Speed Reduction

During normal operation (except backwash/self-priming), when the module temperature reaches the high temperature warning trigger threshold (81℃), it enters the high temperature warning state; when the temperature drops to the high temperature warning release threshold (78℃), the high temperature warning state is released. The display area alternately displays AL01 and running speed or flow

1) If AL01 displayed for the first time, the running capacity will be automatically reduced as below:

a. If current operating capacity is higher than 85%, the running capacity will be automatically reduced by 15%;
b. If current operating capacity is higher than 70%, the running capacity will be automatically reduced by 10%;
c. If current operating capacity is lower than 70%, the running capacity will be automatically reduced by 5%.

7.2 Undervoltage protection

When the device detects that the input voltage is less than 198V, the device will limit the current running speed. The display area alternately displays AL02 and running speed or flow

When input voltage is less than or equal to 180V, the running capacity will be limited to 70%;
When the input voltage range is within 180V - 190V, the running capacity will be limited to 75%;
When the input voltage range is within 190V - 198V, the running capacity will be limited to 85%.

7.3 Trouble shooting

Problem	Possible causes and solution
Pump does not start	• Power Supply fault, disconnected or defective wiring. • Fuses blown or thermal overload open. • Check the rotation of the motor shaft for free movement and lack of obstruction. • Because of long time lying idle. Unplug the power supply and manually rotate motor rear shaft a few times with a screwdriver.
Pump does not prime	• Empty pump/strainer housing. Make sure the pump/strainer housing is filled with water and the O ring of cover is clean. • Loose connections on the suction side. • Strainer basket or skimmer basket loaded with debris. • Suction side clogged. • Distance between pump inlet and liquid level is higher than 2m, the installation height of pump should be lowered.
Low Water Flow	• Pump does not prime. • Air entering suction piping. • Basket full of debris. • Inadequate water level in pool.
Pump being noisy	• Air leak in suction piping, cavitation caused by restricted or undersized suction line or leak at any joint, low water level in pool, and unrestricted discharge return lines. • Vibration caused by improper installation, etc. • Damaged motor bearing or impeller (need to contact the supplier for repair).

7.4 Error code

When the device detects a failure (except for the running capacity reduction strategy and 485 communication failure), it will stop automatically and display the error code. After stopping for 15 seconds, check if the failure is cleared. If cleared, the pump will resume working.

Item	Error Code	Description
1	**E001**	Abnormal input voltage
2	**E002**	Output over current
3	**E101**	Heat sink over heat
4	**E102**	Heat sink sensor error
5	**E103**	Master driver board error
6	**E104**	Phase-deficient protection
7	**E105**	AC current sampling circuit failure
8	**E106**	DC abnormal voltage
9	**E107**	PFC protection
10	**E108**	Motor power overload
11	**E201**	Circuit board error
12	**E203**	RTC time reading error
13	**E204**	Display Board EEPROM reading failure
14	**E205**	Communication Error
15	**E207**	No water protection
16	**E209**	Loss of prime

Note:

1. When E002/E101/E103 is displayed, the device will resume working automatically. However, when it appears a fourth time, the device will stop working, to resume operation, unplug the device and plug in & restart again.

8. MAINTENANCE

Empty the strainer basket frequently. The basket should be inspected through the transparent lid and emptied when there is an evident stack of rubbish inside. The following instructions should be followed:

1). Disconnected the power supply.

2). Unscrew the strainer basket lid anti-clockwise and remove.

3). Lift up the strainer basket.

4). Empty the trapped refuse from the basket and rinse out the debris if necessary.

Note: Do not knock the plastic basket on a hard surface as it will cause damage

5). Inspect the basket for signs of damage, replace it.
6). Check the lid O-ring for stretching, tears, cracks or any other damage
7). Replace the lid, hand tightening is sufficient.

Note: Periodically inspecting and cleaning the strainer basket will help prolong its life.

9. WARRANTY& EXCLUSIONS

Should a defect become evident during the term of the warranty, at its option, the manufacturer will repair or replace such item or part at its own cost and expense. Customers need to follow the warranty claim procedure in order to obtain the benefit on this warranty.

The guarantee will be void in cases of improper installation, improper operation, inappropriate use, tampering or using non-original spare parts.

10. DISPOSAL



When disposing of the product, please sort the waste products as electrical or electronic product waste or hand it over to the local waste collection system.

The separate collection and recycling of waste equipment at the time of disposal will help ensure that it is recycled in a manner that protects human health and the environment. Contact your local authority for information on where you can drop off your water pump for recycling

DE1B-4